Summary in Graph

Exam Summary (GO Classes CS Test Series 2026 | MOCK GATE | Test 4)

Qs. Attempted:	0 (0 + 0)	Correct Marks:	0 (0 + 0)
Correct Attempts:	0 (0 + 0)	Penalty Marks:	0 (0 + 0)
Incorrect Attempts:	0 (0 + 0)	Resultant Marks:	0 (0 + 0)

Total Questions:	65 (30 + 35)
Total Marks:	100 (30 + 70)
Exam Duration:	180 Minutes
Time Taken:	0 Minutes

Individual Question Statistics

Select Metric: Marks Obtained

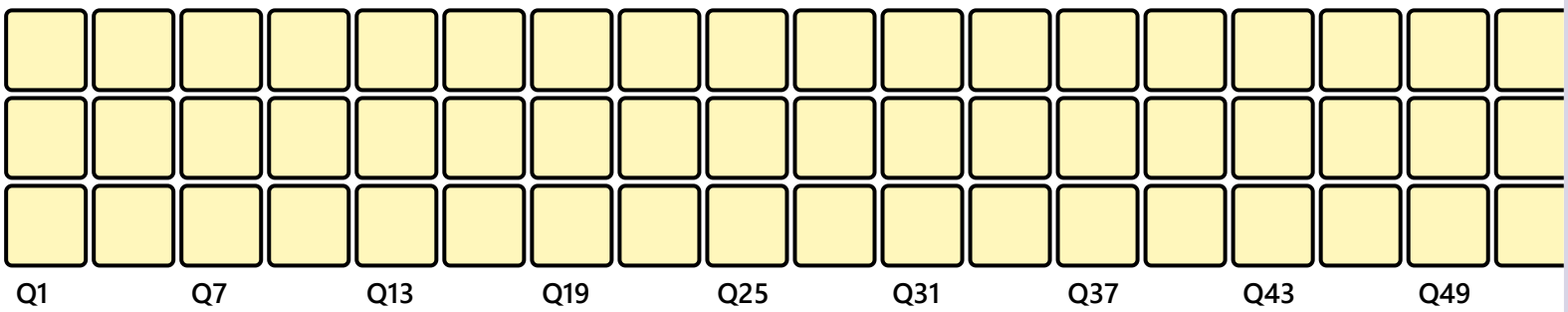

* Average Stats based on first-attempt stats of Top 10% (150) out of 1496 users

EXAM RESPONSE | EXAM STATS | FEEDBACK

Aptitude

Q #1 | Multiple Choice Type | Award: 1 | Penalty: 0.33 | Analytical Aptitude

The last Sunday of March 2006 fell on which date?
Statements:

I. The first Sunday of that month fell on 5th.
II. The last day of that month was Friday.

From which of the above statement(s), Answer of the above question can be drawn?

A. I alone is sufficient
B. II alone is sufficient
C. Either I or II is sufficient
D. Neither I nor II is sufficient

Your Answer: | Correct Answer: C | Not Attempted | Time taken: 00min 00sec | Discuss

Q #2 | Multiple Choice Type | Award: 1 | Penalty: 0.33 | Analytical Aptitude

In a certain code 'SEQUENCE' is coded as 'FDOFVRFT'. How is 'CHILDREN' coded in that code?

A. OFESJMID
B. OFSEMJID
C. OFSEJIMD
D. OFSEJMID

Your Answer: | Correct Answer: B | Not Attempted | Time taken: 00min 00sec | Discuss

Q #3 | Multiple Choice Type | Award: 1 | Penalty: 0.33 | Spatial Aptitude

Choose the correct mirror image of the given figure (X) among the four alternatives.

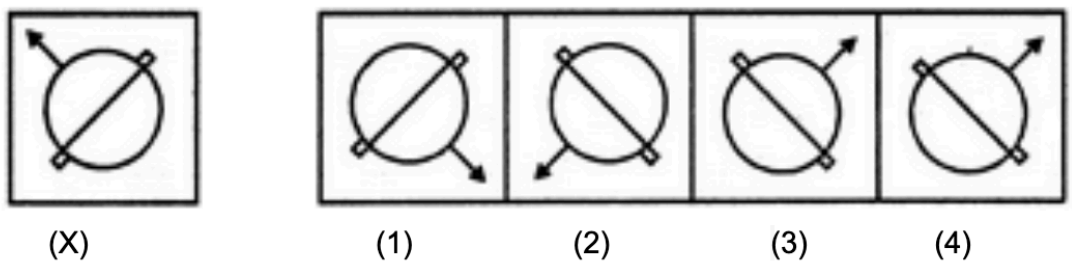

A. 1
B. 2
C. 3
D. 4

Your Answer: | Correct Answer: B, C | Not Attempted | Time taken: 00min 00sec | Discuss

Q #4 | Multiple Choice Type | Award: 1 | Penalty: 0.33 | Analytical Aptitude

If A is the father of B who is a male, C is the mother of A, D is the brother of A, E is the uncle of D. And F is the sister of G, G is the paternal grandfather of B. E is not the brother of G and H is the sister-in-law of D. Then how is H related to G?

A. Daughter
B. Grand-daughter
C. Daughter-in-law
D. Niece

Your Answer: | Correct Answer: C | Not Attempted | Time taken: 00min 00sec | Discuss

Q #5 | Multiple Choice Type | Award: 1 | Penalty: 0.33 | Verbal Aptitude

Find the Error in the following sentence

Bharatnatyam will also(P)/ be featured in the two-week(Q)/ World Music Festival(R)/ No Error (S)

A. P
B. R
C. Q
D. S

Your Answer: | Correct Answer: D | Not Attempted | Time taken: 00min 00sec | Discuss

Q #6 | Multiple Choice Type | Award: 2 | Penalty: 0.67 | Analytical Aptitude

In a class of 36 students, the number of boys is twice the number of girls. Seema, who is a girl, is ranked 19th in the class test and there are 13 boys ahead of her. How many girls are there in the class after Seema? (No two students share the same rank)

A. 5
B. 6
C. 11
D. 12

Your Answer: | Correct Answer: B | Not Attempted | Time taken: 00min 00sec | Discuss

Q #7 | Multiple Choice Type | Award: 2 | Penalty: 0.67 | Analytical Aptitude

Statements:

- All the bottles are boxes.
- All the boxes are bags.
- Some bags are trays.

Conclusions:

1. Some bottles are trays.
2. Some trays are boxes.
3. All the bottles are bags.
4. Some trays are bags.

Which of the above conclusion(s) follows from the given statements?

A. Only (3) and (4)
B. Only (1) and (2)
C. Only (2) and (3)
D. Only (1) and (4)

Your Answer: | Correct Answer: A | Not Attempted | Time taken: 00min 00sec | Discuss

Q #8 | Multiple Choice Type | Award: 2 | Penalty: 0.67 | Quantitative Aptitude

A rhombus has one of its diagonal 65% of the other $(\mathrm{d1} = 0.65\ \mathrm{d2})$. A square is drawn using $\mathrm{d2}$ as a side. What will be the ratio of the area of the rhombus to that of the square?

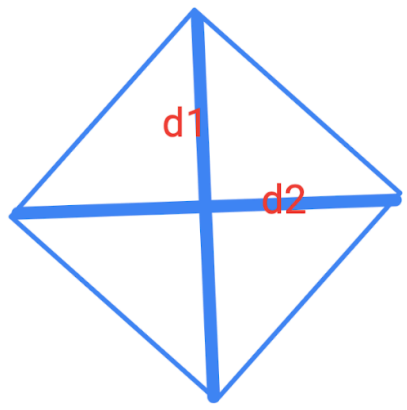

A. $13 : 40$
B. $12 : 13$
C. $40 : 13$
D. $15 : 46$

Your Answer: | Correct Answer: A | Not Attempted | Time taken: 00min 03sec | Discuss

Q #9 | Multiple Choice Type | Award: 2 | Penalty: 0.67 | Quantitative Aptitude

If $a = \sqrt{17} + 4$ find the value of $\frac{(3a^2-5a-3)}{(4a^2-3a-4)}$?

A. $\frac{19}{29}$
B. $\frac{131}{200}$
C. $\frac{15}{16}$
D. $\frac{29}{19}$

Your Answer: | Correct Answer: A | Not Attempted | Time taken: 00min 00sec | Discuss

Q #10 | Multiple Choice Type | Award: 2 | Penalty: 0.67 | Quantitative Aptitude

The average salary of the teachers of a school is Rs. 3000. When the salary of two more teachers is included, the average salary reduces by Rs. 100, and the total salary increases by Rs. 4000. Find the number of teachers (before inclusion).

A. 16
B. 17
C. 18
D. 19

Your Answer: | Correct Answer: C | Not Attempted | Time taken: 00min 00sec | Discuss

Technical

Q #1 | Multiple Choice Type | Award: 1 | Penalty: 0.33 | Computer Networks

A router with the following forwarding table receives a packet with destination IP address $128.195.3.10$. Which will be the outgoing interface of the packet?

Network ID and Mask	Interface
128.195.0.0/8	eth2
128.195.0.0/16	eth0
128.195.0.0/24	eth1
0.0.0.0/0	eth3

A. eth0
B. eth1
C. eth2
D. eth3

Your Answer: | Correct Answer: A | Not Attempted | Time taken: 00min 00sec | Discuss

Q #2 | Numerical Type | Award: 1 | Penalty: 0 | Compiler Design

Consider the following three-address code fragment:

```
    1.  L1:     a = b + c
    2.  L2:     b = b * 2
    3.          if (b < d) goto L3
    4.          f = b - a
 5. 5.          if (f < d) goto L1
    6.  L3:     g = 7 + f
    7.          a = g - 6
    8.          if (a > d) goto L2
    9.          e = g
10. 10.         f = e * a
```

What is the number of basic blocks in the above code fragment?

Your Answer: | Correct Answer: 5 | Not Attempted | Time taken: 00min 00sec | Discuss

Q #3 | Multiple Choice Type | Award: 1 | Penalty: 0.33 | Operating System

Consider three processes $\mathrm{P1}, \mathrm{P2}$, and $\mathrm{P3}$ with respective arrival times of 0 ms, 10 ms, and 20 ms and respective processing times of 30 ms, 15 ms, and 30 ms. The three processes are preemptively scheduled on a single-CPU system using the shortest-remaining-processing-time-first scheduling policy. Which of the following shows the order in which the processes complete, from first to last?

A. P1 P2 P3
B. P1 P3 P2
C. P2 P1 P3
D. P2 P3 P1

Your Answer: | Correct Answer: C | Not Attempted | Time taken: 00min 00sec | Discuss

Q #4 | Multiple Select Type | Award: 1 | Penalty: 0 | Operating System

Consider the following different possible pseudocode taken from two processes, where A, B are blocks of code, and S is a semaphore initialized to 0.

Which of the following sequence ensures that A always runs BEFORE B?

A.
```
Process 1:          Process 2:
    A;                  up(S);
    down(S);            B;
```

B.
```
Process 1:          Process 2:
    A;                  down(S);
    up(S);              B;
```

C.
```
Process 1:          Process 2:
    down(S);            down(S);
    A;                  B;
    up(S);              up(S);
```

D.
```
Process 1:          Process 2:
    up(S);              down(S);
    A;                  B;
```

Your Answer: | Correct Answer: B | Not Attempted | Time taken: 00min 00sec | Discuss

Q #5 | Multiple Choice Type | Award: 1 | Penalty: 0.33 | Data Structures

Consider the following possible data structures for a set of n distinct integers.

I. A min-heap
II. An array of length n sorted in increasing order
III. A balanced binary search tree

For which of these data structures is the number of steps needed to find and remove the 7th largest element $\mathrm{O}(\log n)$ in the worst case?

A. II only
B. I and II
C. I and III
D. II and III

Your Answer: | Correct Answer: D | Not Attempted | Time taken: 00min 00sec | Discuss

Q #6 | Multiple Choice Type | Award: 1 | Penalty: 0.33 | Algorithms

Consider the following function -

```
int f (int n){
    if (n==0) return 0;
    else if (n==1) return 1;
    else {
        int val = 4*f (n-1);
        val = val - 3*f (n-2);
        val += 2;
        return val;
    }
}
```

Let $f(n)$ be the value returned by the function f when given input $n > 1$. And let $\mathrm{T}(n)$ be the time complexity of the function for input size n.

Consider below statements for $n > 1$ -

- $\mathrm{S1} : f(n) = 4f(n-1) - 3f(n-2) + 2$
- $\mathrm{S2} : \mathrm{T}(n) = 4\mathrm{T}(n-1) + 3\mathrm{T}(n-2) + \theta(1)$

Which of the following is CORRECT?

A. $\mathrm{S1}$ is correct but $\mathrm{S2}$ is incorrect
B. $\mathrm{S1}$ is incorrect but $\mathrm{S2}$ is correct
C. Both are correct
D. Both are incorrect

Your Answer: | Correct Answer: A | Not Attempted | Time taken: 00min 00sec | Discuss

Q #7 | Multiple Choice Type | Award: 1 | Penalty: 0.33 | Algorithms

Consider the following pseudocode of a recursive sorting algorithm which takes an array L of n integers:

```
Sillysort(L){
    if(len(L) <= 1){
        return L;
    } else{
        1. Sillysort the first third of L;
        2. Heapsort the remaining two thirds of L;
        3. Merge the two sorted lists together (using
           standard merge procedure of merge sort);
    }
}
```

What is the time complexity of Sillysort for an array of n integers?

A. $\theta(n^2)$
B. $\theta(n \log n)$
C. $\theta(n^2 \log n)$
D. $\theta(n^3 \log n)$

Your Answer: | Correct Answer: B | Not Attempted | Time taken: 00min 00sec | Discuss

Q #8 | Multiple Choice Type | Award: 1 | Penalty: 0.33 | Mathematical Logic

Suppose that $\mathrm{P}(x, y)$ means "x is a parent of y" and $\mathrm{M}(x)$ means "x is male". If $\mathrm{F}(v, w)$ equals

$$\mathrm{M}(v) \wedge \exists x \exists y(\mathrm{P}(x, y) \wedge \mathrm{P}(x, v) \wedge (y \neq v) \wedge \mathrm{P}(y, w)),$$

what is the meaning of the expression $\mathrm{F}(v, w)$?

A. v is a brother of w.
B. v is a nephew of w.
C. v is an uncle of w.
D. v is a grandfather of w.

Your Answer: | Correct Answer: C | Not Attempted | Time taken: 00min 00sec | Discuss

Q #9 | Multiple Select Type | Award: 1 | Penalty: 0 | Mathematical Logic

Suppose that S and T are sets. Which of the following first-order logic statements are translations of the statement "S is not a subset of T"?

A. $\forall x.(x \in \mathrm{S} \rightarrow x \notin \mathrm{T})$
B. $\forall x.(x \in \mathrm{S} \wedge x \notin \mathrm{T})$

C. $\exists x. (x \in \mathrm{S} \rightarrow x \notin \mathrm{T})$
D. $\exists x. (x \in \mathrm{S} \wedge x \notin \mathrm{T})$

Your Answer: | Correct Answer: D | Not Attempted | Time taken: 00min 00sec | Discuss

Q #10 Multiple Choice Type | Award: 1 | Penalty: 0.33 | Digital Logic

The output Y in the circuit below is always "1" when

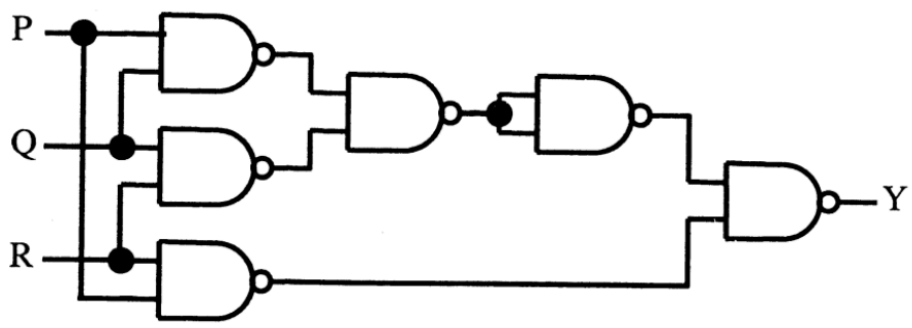

A. two or more of the inputs $\mathrm{P}, \mathrm{Q}, \mathrm{R}$ are "0"
B. two or more of the inputs $\mathrm{P}, \mathrm{Q}, \mathrm{R}$ are "1"
C. any odd number of the inputs $\mathrm{P}, \mathrm{Q}, \mathrm{R}$ is "0"
D. any odd number of the inputs $\mathrm{P}, \mathrm{Q}, \mathrm{R}$ is "1"

Your Answer: | Correct Answer: B | Not Attempted | Time taken: 00min 00sec | Discuss

Q #11 Multiple Select Type | Award: 1 | Penalty: 0 | Digital Logic

The circuit below has a 2-to-4 decoder with input AB and active high outputs connected to two 2-to-1 multiplexers, followed by an exclusive OR (XOR) gate.

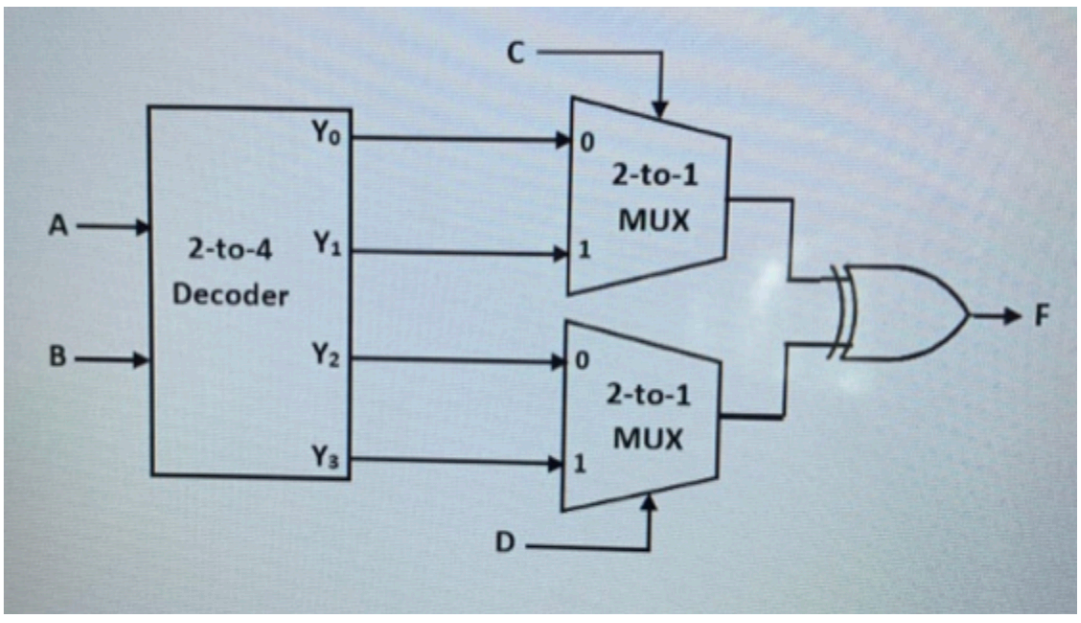

Which of the following input combinations makes the output $\mathrm{F}(\mathrm{A}, \mathrm{B}, \mathrm{C}, \mathrm{D}) = 1$?

A. $\mathrm{A} = 1,\ \mathrm{B} = 1, \mathrm{C} = 0, \mathrm{D} = 0$
B. $\mathrm{A} = 0, \mathrm{B} = 1, \mathrm{C} = 1, \mathrm{D} = 0$
C. $\mathrm{A} = 0, \mathrm{B} = 0, \mathrm{C} = 0, \mathrm{D} = 0$
D. $\mathrm{A} = 0, \mathrm{B} = 0, \mathrm{C} = 1, \mathrm{D} = 1$

Your Answer: | Correct Answer: B;C | Not Attempted | Time taken: 00min 00sec | Discuss

Q #12 Numerical Type | Award: 1 | Penalty: 0 | CO & Architecture

In a microprocessor with a 16 bit address bus, the most significant address lines $\mathrm{A15}$ to $\mathrm{A12}$ are used to select a 4096 word memory unit, while lines $\mathrm{A0}$ to $\mathrm{A11}$ are used to address a particular word in the memory unit. If the 3 least significant lines of the address bus $\mathrm{A0}$ to $\mathrm{A2}$ are short-circuited to ground, the addressable number of words within a particular memory unit is _____.

Your Answer: | Correct Answer: 512 | Not Attempted | Time taken: 00min 00sec | Discuss

Q #13

Multiple Choice Type | Award: 1 | Penalty: 0.33 | CO & Architecture

In a pipelined RISC computer where all arithmetic instructions have the same CPI (cycles per instruction), which of the following actions would improve the execution time of a typical program?

I. Increasing the clock cycle rate
II. Disallowing any forwarding in the pipeline
III. Doubling the sizes of the instruction cache and the data cache without changing the clock cycle time

A. I only
B. I, III only
C. III only
D. None

Your Answer: | Correct Answer: B | Not Attempted | Time taken: 00min 00sec | Discuss

Q #14

Multiple Choice Type | Award: 1 | Penalty: 0.33 | Programming in C

Given the following variable declarations:

```c
char *words[] = {"hello", "world"};
void *v = words;
```

Which of the following prints out hello world?

A.
```c
printf("%c %c\n", *v, *(v + 1));
```

B.
```c
printf("%s %s\n", *(char **)v, *((char **)v + 1));
```

C.
```c
printf("%s %s\n", *(char *)v, *((char *)v + 1));
```

D.
```c
printf("%s %s\n", **v, **(v + 1));
```

Your Answer: | Correct Answer: B | Not Attempted | Time taken: 00min 00sec | Discuss

Q #15

Numerical Type | Award: 1 | Penalty: 0 | Programming in C

Consider the following function -

```c
int abc(void) {
    int a = 3;
    static int b = 1;
    if(++a > ++b)
        return a++;
    else return ++b;
}
```

Suppose main() calls the function three times. What value is returned to main() in the third call to abc()?

Your Answer: | Correct Answer: 5 | Not Attempted | Time taken: 00min 00sec | Discuss

Q #16 | Multiple Select Type | Award: 1 | Penalty: 0 | Algorithms

Let G be any simple undirected (no self-loops or parallel edges) with positive and distinct edge weights. Let s and t be two vertices in G.

Which of the following is/are TRUE?

A. Any shortest path from s to t in G must include the edge of minimum weight.
B. If the weights of all edges in G are increased by 2025, then any MST in G is an MST in the modified edge-weighted graph.
C. The shortest path from s to t in G is unique.
D. If the weights of all edges leaving s are increased by 2025, then any shortest path from s to t in G is a shortest path in the modified edge-weighted graph.

Your Answer: | Correct Answer: B;D | Not Attempted | Time taken: 00min 00sec | Discuss

Q #17 | Multiple Choice Type | Award: 1 | Penalty: 0.33 | Operating System

The lookup page table shown below is for a job in a page virtual storage system

Virtual Page	Actual Page
0	3
1	–
2	4
3	0

with a page size of 1024 locations. Each virtual address is in the form $[p, d]$ where p and d are the page number and the displacement in that page, respectively. A virtual address of $[0, 514]$ maps to an actual address of

A. 514
B. 1024
C. 3586
D. 4514

Your Answer: | Correct Answer: C | Not Attempted | Time taken: 00min 00sec | Discuss

Q #18 | Multiple Choice Type | Award: 1 | Penalty: 0.33 | Databases

Consider a $B+$ tree defined on a database relation. The $B+$ tree's leaves hold RIDs(record pointers), not the actual tuples. The size of the index key values is such that N (key, pointer) or (key, RID) pairs can be stored in each block of the index.

What is the maximum relation size (i.e., the maximum number of tuples) that can be indexed using a $B+$ tree of height 3? (Height of a single node $B+$ tree is considered as 1)

A. $\theta(N)$
B. $\theta(N^2)$
C. $\theta(N^3)$
D. $\theta(N^4)$

Your Answer: | Correct Answer: C | Not Attempted | Time taken: 00min 00sec | Discuss

Q #19 Multiple Choice Type | Award: 1 | Penalty: 0.33 | Databases

In relational algebra, $\mathrm{R} \bowtie_{(\text{condition})} \mathrm{S}$ can be rewritten as:

A. $\mathrm{R} \times \mathrm{S}$
B. $\mathrm{R} \times_{(\text{condition})} \mathrm{S}$
C. $\sigma_{(\text{condition})} \mathrm{R} \times \sigma_{(\text{condition})} \mathrm{S}$
D. $\sigma_{(\text{condition})} (\mathrm{R} \times \mathrm{S})$

Your Answer: | Correct Answer: D | Not Attempted | Time taken: 00min 00sec | Discuss

Q #20 Multiple Choice Type | Award: 1 | Penalty: 0.33 | Probability

Suppose we roll two distinct tetrahedral (four-sided) dice. Each dice contain the numbers from 1 to 4. Let X be the number of dice that show an odd number, Y the number that show an even number. So both X and Y only take on the values $0, 1, 2$.

What will be the probability that $\mathrm{Y} > \mathrm{X}$ i.e. $\mathrm{P}(\mathrm{Y} > \mathrm{X})$?

A. $1/2$
B. $3/4$
C. $1/4$
D. $2/3$

Your Answer: | Correct Answer: C | Not Attempted | Time taken: 00min 00sec | Discuss

Q #21 Multiple Choice Type | Award: 1 | Penalty: 0.33 | Calculus

Evaluate the limit

$$\lim_{x \to 2} \frac{x^2 - 3x + 2}{2x^2 - 8}$$

A. $1/4$
B. $1/2$
C. $1/8$
D. $1/3$

Your Answer: | Correct Answer: C | Not Attempted | Time taken: 00min 00sec | Discuss

Q #22 Multiple Choice Type | Award: 1 | Penalty: 0.33 | Algorithms

Of the following, which gives the best upper bound for the value of $f(\mathrm{N})$ where f is a solution to the recurrence

$$f(2\mathrm{N}+1) = f(2\mathrm{N}) = f(\mathrm{N}) + \log \mathrm{N} \text{ for } \mathrm{N} \geq 1,$$

with $f(1) = 0$?

A. $\mathrm{O}(\log \mathrm{N})$
B. $\mathrm{O}(\mathrm{N} \log \mathrm{N})$
C. $\mathrm{O}\left((\log \mathrm{N})^2\right)$
D. $\mathrm{O}(\mathrm{N})$

Your Answer: | Correct Answer: C | Not Attempted | Time taken: 00min 00sec | Discuss

Q #23 Multiple Choice Type | Award: 1 | Penalty: 0.33 | Set Theory & Algebra

Let A be a finite nonempty set with cardinality n. The number of subsets $\mathrm{S} \subseteq \mathrm{A}$ having odd cardinality is

A. not determinable except in terms of whether n is even or odd
B. $2^{\frac{n}{2}}$
C. 2^{n-1}
D. 2^{n}

Your Answer: | Correct Answer: C | Not Attempted | Time taken: 00min 00sec | Discuss

Q #24 Numerical Type | Award: 1 | Penalty: 0 | Computer Networks

Consider sending a 3000 byte datagram (including IP header of 20 bytes) into a link that has an MTU of 500 bytes. Let X be the number of fragments generated and Y be offset on the last fragment then what will be the value of $\mathrm{X} + \mathrm{Y}$?

Your Answer: | Correct Answer: 367 | Not Attempted | Time taken: 00min 00sec | Discuss

Q #25 Multiple Choice Type | Award: 1 | Penalty: 0.33 | Databases

Consider the following two transactions:

$$\mathrm{T1} : \mathrm{R(A)}, \mathrm{W(A)}, \mathrm{R(B)}, \mathrm{W(B)}, \text{Commit}$$
$$\mathrm{T2} : \mathrm{R(B)}, \mathrm{R(C)}, \mathrm{W(C)}, \mathrm{W(B)}, \text{Commit}$$

Consider the following interleaved schedule of the two transactions:

$$\mathrm{R_{T1}(A)}, \mathrm{R_{T2}(B)}, \mathrm{R_{T2}(C)}, \mathrm{W_{T1}(A)}, \mathrm{R_{T1}(B)}, \mathrm{W_{T1}(B)}, \mathrm{W_{T2}(C)}, \mathrm{W_{T2}(B)} \text{ Commit }_{\mathrm{T1}}, \text{ Commit }_{\mathrm{T2}}$$

Which of the following is true for the above schedule?

A. The schedule is conflict serializable & recoverable.
B. The schedule is conflict serializable but not recoverable.
C. The schedule is not conflict serializable but recoverable.
D. The schedule is neither conflict serializable nor recoverable.

Your Answer: | Correct Answer: C | Not Attempted | Time taken: 00min 00sec | Discuss

Q #26 Numerical Type | Award: 2 | Penalty: 0 | Computer Networks

A node x is part of a network running distance vector routing protocol. x has three entries in its routing table:

Destination	Cost	Next Hop
w	4	w
y	α	z
z	β	w

α and β are two unknown values (unknown to you, but not to x). Assume that the distance vector routing protocol has converged and the minimum cost path from x to every other node has been found. The given table contains the costs after the convergence of the algorithm. We denote $c(x, y)$ as the direct link cost between x and y, and $d_x(y)$ as the cost of the minimum cost path from x to y. The link cost is a positive integer. Also, assume link costs are symmetric in both directions. We know that $c(x, w)$ is 4, and $c(x, z)$ is 10. What is the maximum possible value for $d_w(z)$?

Your Answer: | Correct Answer: 6 | Not Attempted | Time taken: 00min 00sec | Discuss

Q #27 Multiple Select Type | Award: 2 | Penalty: 0 | Compiler Design

Consider the following grammar for generating binary fractions.

$$\begin{aligned}
&\mathrm{F} \rightarrow 0.\mathrm{B} && \{\mathrm{F.val} = \mathrm{B.val}\} \\
&\mathrm{B}_0 \rightarrow 0\mathrm{B}_1 && \{\mathrm{X}\} \\
&\mathrm{B}_0 \rightarrow 1\mathrm{B}_1 && \{\mathrm{Y}\} \\
&\mathrm{B} \rightarrow 0 && \{\mathrm{B.val} = 0\} \\
&\mathrm{B} \rightarrow 1 && \{\mathrm{B.val} = 1/2\}
\end{aligned}$$

What should be the missing semantic actions X and Y to calculate the decimal value of an input string?

Recall that the numeric value of a binary fraction $0.\mathrm{b}_1 b_2 \ldots b_n$ is calculated as $\sum_{i=1}^{n} b_i 2^{-i}$. Each non-terminal has a synthesized attribute val that is used to store its value. The final value should be returned in $\mathrm{F.val}$.

A. X is $\mathrm{B}_0 \cdot \mathrm{val} = \mathrm{B}_1 \cdot \mathrm{val}/2$
B. Y is $\mathrm{B}_0 \cdot \mathrm{val} = \mathrm{B}_1 \cdot \mathrm{val}/2 + 1/2$
C. X is $\mathrm{B}_0 \cdot \mathrm{val} = \mathrm{B}_1 \cdot \mathrm{val}/4$
D. Y is $\mathrm{B}_0 \cdot \mathrm{val} = \mathrm{B}_1 \cdot \mathrm{val}/4 + 1/2$

Your Answer: | Correct Answer: A;B | Not Attempted | Time taken: 00min 00sec | Discuss

Q #28 Numerical Type | Award: 2 | Penalty: 0 | Data Structures

A complete binary min-heap is made by including each integer in $[1, 1023]$ exactly once. The level of a node in the heap is the length of the path from the root of the heap to that node. Thus, the root is at level 0. The maximum number that could appear at level 1 in such a heap will be?

Your Answer: | Correct Answer: 513 | Not Attempted | Time taken: 00min 00sec | Discuss

Q #29 Multiple Choice Type | Award: 2 | Penalty: 0.67 | Programming in C

Consider the following recursive program-

```
int mysteryX(int *a, int i, int j, int P) {
    if (i >= j) {
        return i;
    } else if (a[i] < P) {
        return mysteryX(a, i + 1, j, P);
    } else if (a[j] > P) {
        return mysteryX(a, i, j - 1, P);
    } else {
        int temp = a[i];
        a[i] = a[j];
        a[j] = temp;
        return mysteryX(a, i + 1, j - 1, P);
    }
}
int main() {
    int a[] = {9,7,5,2,6,8,4,1,3};
    mysteryX(a,0,8,3);
    for (int i=0; i<9; i++)
    printf("%d ",a[i]);
    return 0;
}
```

What will be the output of the program?

A. 3 1 2 5 6 8 4 7 9
B. 1 2 5 7 6 8 4 9 3
C. 1 2 3 5 6 8 4 7 9
D. None of these

Your Answer: | Correct Answer: A | Not Attempted | Time taken: 00min 00sec | Discuss

Q #30 Multiple Choice Type | Award: 2 | Penalty: 0.67 | Data Structures

Consider the following C-like pseudo-code-

```
swapK(Queue q, int k) {
    if (k > q.size())
        print("k cannot be more than queue size");
for (int i = 0; i < k / 2; i++) {
    int elem1 = q.dequeue();
    int elem2 = q.dequeue();
    q.enqueue(elem2);
    q.enqueue(elem1);
}

for (int i = 0; i < q.size() - k; i++) {
    q.enqueue(q.dequeue());
}

}
```

enqueue, **dequeue** and **size** are standard queue operations.

Let a queue Q contain elements $1, 2, 3, 4, 5, 6, 7, 8$ in that order where 1 is on front. What will be the output of swapK(Q,6)?

(In all the options leftmost number is front of the queue and the rightmost is rear of the queue).

A. $2, 1, 4, 3, 5, 6, 7, 8$
B. $2, 1, 4, 3, 6, 5, 7, 8$
C. $7, 8, 2, 1, 4, 3, 6, 5$
D. $2, 1, 4, 3, 6, 5, 8, 7$

Your Answer: | Correct Answer: B | Not Attempted | Time taken: 00min 00sec | Discuss

Q #31 | Multiple Choice Type | Award: 2 | Penalty: 0.67 | Data Structures

The following function operates on a linked list of Node objects, which is represented by a pointer called head that points to the first node in the list. The function is recursive in nature.

```
Node* mystryrecur(Node* head, int x)
{
   if (head == NULL)
       return NULL;

   if (head → data == x)
   {
       Node* tmp = head → next;
       free(head);
       return mystryrecur(tmp, x);;
   }
   else
   {
       head → next = mystryrecur(head → next, x);
       return head;
   }
}
```

Let the linked list be following and head points to the first node of the linked list.

$$0 \rightarrow 4 \rightarrow 2 \rightarrow 4 \rightarrow 6 \rightarrow \text{ NULL}$$

What will be the result of the linked list after executing the following line and accessing it through the "head" pointer?

```
head = mystryrecur( head, 2);
```

A. $0 \rightarrow 4 \rightarrow 6 \rightarrow \text{NULL}$
B. $0 \rightarrow 4 \rightarrow 4 \rightarrow 6 \rightarrow \text{NULL}$
C. $0 \rightarrow 6 \rightarrow \text{NULL}$
D. $10 \rightarrow \text{NULL}$

Your Answer: | Correct Answer: B | Not Attempted | Time taken: 00min 00sec | Discuss

Q #32 | Numerical Type | Award: 2 | Penalty: 0 | Linear Algebra

Let the matrix A be given by

$$\begin{bmatrix} 1 & 3 & -2 & 2 \\ 0 & 1 & 1 & -5 \\ 1 & 2 & -3 & 7 \\ -2 & -8 & 2 & -1 \end{bmatrix}$$

What will be the number of linearly independent solutions of the homogeneous system of linear equation $\mathrm{Ax} = 0$?

Your Answer: | Correct Answer: 1 | Not Attempted | Time taken: 00min 00sec | Discuss

Q #33 | Multiple Choice Type | Award: 2 | Penalty: 0.67 | Algorithms

Each of the figures below represents a partial spanning tree with bold edges. Determine whether it could possibly be obtained from (a prematurely stopped) Prim's algorithm, (a prematurely stopped) Kruskal's algorithm, Both or Neither.
Prim's algorithm starts with vertex V in all cases.

$T1$:

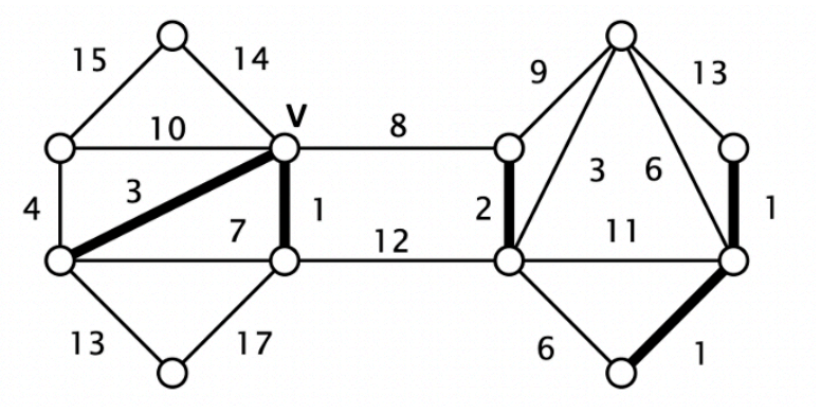

$T2$:

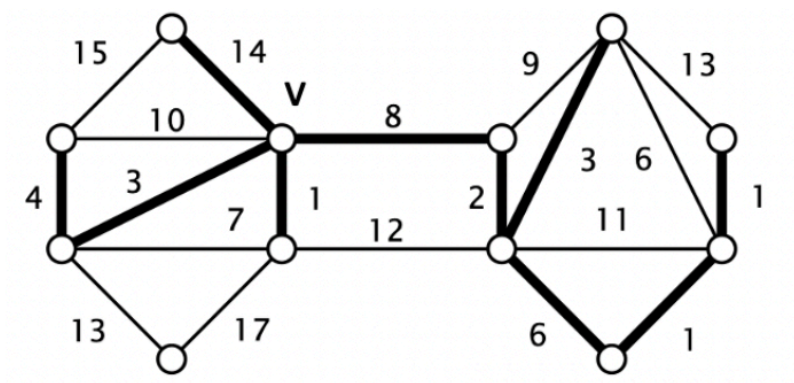

$T3$:

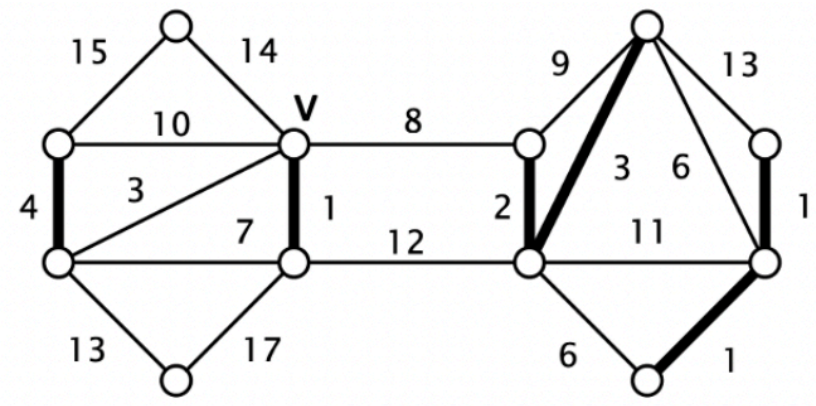

$T4$:

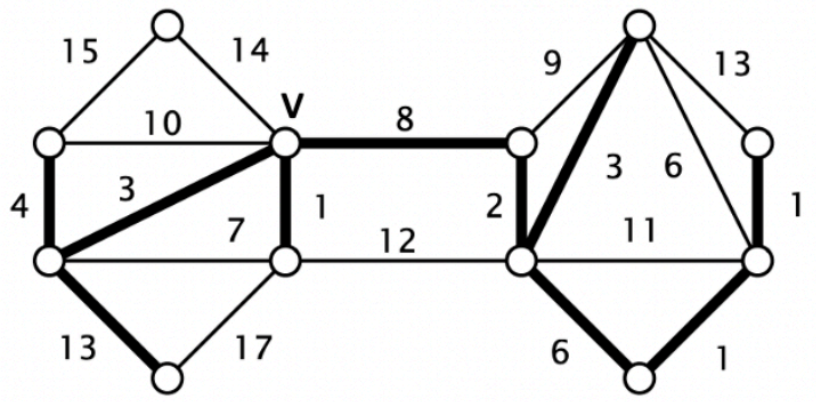

A. $T1$ - Kruskal's only, $T2$- Prims only, $T3$- Neither, $T4$ - Both
B. $T1$ - Kruskal's only, $T2$- Prims only, $T3$ - Kruskal's only, $T4$ - Kruskal's only
C. $T1$ - Kruskal's only, $T2$- Neither, $T3$-Neither, $T4$ - Both
D. $T1$ - Kruskal's only, $T2$- Neither, $T3$- Kruskal's only, $T4$ - Prims only

Your Answer: | Correct Answer: C | Not Attempted | Time taken: 00min 00sec | Discuss

Q #34 | Multiple Choice Type | Award: 2 | Penalty: 0.67 | Operating System

A couple, Romeo and Juliet, share a bowl of frozen yogurt (We assume that the bowl is magical and has an infinite supply of frozen yogurt).

Only one person can eat from the bowl at a time, and it doesn't matter who eats first.

Let the initialization of semaphores be as follows-

```
semaphore s = 1;
semaphore romeo = 0;
semaphore juliet = 0;
```

Consider two possible solutions that use above semaphores to model the behavior of the couple.

Solution 1 :

```
Romeo:                          Juliet:
    while (true) {                while (true) {
        down(s)                       down(s)
        eat()                         eat()
        up(juliet)                    up(romeo)
        down(romeo)                   down(juliet)
        up(s)                         up(s)
    }                             }
```

Solution 2 :

```
Romeo:                          Juliet:
    while (true) {                while (true) {
        down(s)                       down(s)
        eat()                         eat()
        up(s)                         up(s)
        up(juliet)                    up(romeo)
        down(romeo)                   down(juliet)
    }                             }
```

Which of the following is true about these solutions?

A. Solution 1 may lead to deadlock but not solution 2
B. Solution 2 may lead to deadlock but not solution 1
C. Both solutions may lead to deadlock
D. None of the solutions will ever lead to deadlock

Your Answer: | Correct Answer: A | Not Attempted | Time taken: 00min 00sec | Discuss

Q #35 | Numerical Type | Award: 2 | Penalty: 0 | Operating System

Suppose that we have the following resources: $\mathrm{A}, \mathrm{B}, \mathrm{C}$ and threads $\mathrm{T1}, \mathrm{T2}, \mathrm{T3}, \mathrm{T4}$. The total number of each resource is:

Total		
A	B	C
12	9	12

Further, assume that the processes have the following maximum requirements and current allocations:

Thread ID	Current Allocation			Maximum		
	A	B	C	A	B	C
T1	2	1	3	4	9	4
T2	1	2	3	5	3	3
T3	5	4	3	6	4	3
T4	2	1	2	4	8	2

How many safe sequences are possible for the above state of the system? (If you find the system in an unsafe state then please answer 0).

Your Answer: | Correct Answer: 1 | Not Attempted | Time taken: 00min 00sec | Discuss

Q #36 Multiple Select Type | Award: 2 | Penalty: 0 | Probability

Consider a coin with probability p to be heads. We toss a coin until we get a head. Which of the following is/are true ?

A. The probability that the first heads will appear on second or fourth toss is $p(1-p)+p(1-p)^3$
B. The probability that the first heads will appear on the even-numbered tosses is $\frac{1-p}{2-p}$
C. Expected Number of tosses to get first head is $1/p$
D. The probability that the first heads will appear on the odd-numbered tosses is $1/(2-p)$

Your Answer: | Correct Answer: A;B;C;D | Not Attempted | Time taken: 00min 00sec | Discuss

Q #37 Multiple Choice Type | Award: 2 | Penalty: 0.67 | Compiler Design

Consider the following (already augmented) grammars for the language a^+ :

$$\text{Grammar G1:} \quad \begin{aligned} &\mathrm{S} \rightarrow \mathrm{A} \\ &\mathrm{A} \rightarrow \mathrm{Aa} \mid \mathrm{a} \end{aligned}$$

and

$$\text{Grammar G2:} \quad \begin{aligned} &\mathrm{S} \rightarrow \mathrm{A} \\ &\mathrm{A} \rightarrow \mathrm{aA} \mid \mathrm{a} \end{aligned}$$

Both of these grammars are $\mathrm{SLR}(1)$.

Which of the following is TRUE when we run both $\mathrm{SLR}(1)$ parsers on the string a^n?

A. $\mathrm{SLR}(1)$ parser for the grammar $\mathrm{G1}$ will take $\Theta(n)$ space in its parsing stack and $\mathrm{SLR}(1)$ parser for the grammar $\mathrm{G2}$ will take $\Theta(1)$ space in its parsing stack
B. $\mathrm{SLR}(1)$ parser for the grammar $\mathrm{G1}$ will take $\Theta(1)$ space in its parsing stack and $\mathrm{SLR}(1)$ parser for the grammar $\mathrm{G2}$ will take $\Theta(n)$ space in its parsing stack
C. Both of the grammar will take $\Theta(1)$ stack space while parsing a^n using their respective $\mathrm{SLR}(1)$ parsers.
D. Both of the grammar will take $\Theta(n)$ stack space while parsing a^n using their respective $\mathrm{SLR}(1)$ parsers

Your Answer: | Correct Answer: B | Not Attempted | Time taken: 00min 00sec | Discuss

Q #38 Numerical Type | Award: 2 | Penalty: 0 | Compiler Design

Consider the following grammar and associated semantic actions.

$$\begin{aligned} &\mathrm{S} \rightarrow \mathrm{ABCD} && \{\mathrm{x} = 11 * \mathrm{x} + 1;\} \\ &\mathrm{D} \rightarrow \mathrm{d} && \{\mathrm{x} = 7 * \mathrm{x} + 1;\} \\ &\mathrm{C} \rightarrow \mathrm{cc} && \{\mathrm{x} = 5 * \mathrm{x} + 1;\} \\ &\mathrm{B} \rightarrow \mathrm{Bb} && \{\mathrm{x} = 3 * \mathrm{x} + 1;\} \\ &\mathrm{B} \rightarrow \mathrm{b} && \{\mathrm{x} = \mathrm{x} + 1;\} \\ &\mathrm{A} \rightarrow \mathrm{gBa} && \{\mathrm{x} = 2 * \mathrm{x} + 1;\} \end{aligned}$$

The variable x is global-i.e., all semantic actions update the same x. Assume x is initialized before parsing to 0. What is the final value of x in a bottom-up parse of the following input string: $gbbabbccd$

Your Answer: | Correct Answer: 12024 | Not Attempted | Time taken: 00min 00sec | Discuss

Q #39 | Multiple Choice Type | Award: 2 | Penalty: 0.67 | Combinatory

Consider a brute-force password-guessing attack that can submit authentication requests at a rate of one every millisecond. Assume that a password consists of 1-6 characters from a 10-symbol alphabet. In the average case, approximately how many seconds would it take to determine the password using this type of attack?

A. $1,111$
B. 500
C. 555
D. $1,000$

Your Answer: | Correct Answer: C | Not Attempted | Time taken: 00min 00sec | Discuss

Q #40 | Multiple Select Type | Award: 2 | Penalty: 0 | Set Theory & Algebra

A binary relation R over a set A is called surjective if the following statement is true about R :

$\forall b \in A. \exists a \in A. aRb$

Which of the following statements is(are) true?

A. A binary relation R over a set A is an equivalence relation if R is surjective, symmetric, and transitive.
B. If a binary relation R over a set A is an equivalence relation then R is surjective.
C. If a binary relation R over a set A is reflexive then R is surjective.
D. If a binary relation R over a set A is surjective then R is reflexive.

Your Answer: | Correct Answer: A;B;C | Not Attempted | Time taken: 00min 00sec | Discuss

Q #41 | Numerical Type | Award: 2 | Penalty: 0 | CO & Architecture

Consider a single-issue in-order 5-stage pipeline - IF (Instruction Fetch), ID (Instruction Decode and register read), EX (Execute), MEM (Memory), and WB (Write Back). All register reads take place in the second phase of a clock cycle and all register writes occur in the first phase and there is no operand forwarding in use. Consider the execution of the following instruction sequence:

$$\begin{array}{lll} I1: & lw\ r0, 0(r5) & /^{*} r0 \leftarrow M[0+r5]\ */ \\ I2: & addi\ r5, r5, 4 & /^{*} r5 \leftarrow 4+r5\ */ \\ I3: & add\ r0, r3, r0 & /^{*} r0 \leftarrow r3+r0\ */ \\ I4: & sw\ r0, 0(r5) & /^{*} M[0+r5] \leftarrow r0\ */ \\ I5: & xor\ r6, r2, r5 & /^{*} r6 \leftarrow r2+r5\ */ \\ I6: & add\ r2, r6, r2 & /*\ r2 \leftarrow r6+r2\ */ \end{array}$$

Identify all the data hazards in the above sequence of instructions. If the number of RAW (read after write) hazards is denoted by A, WAR (write after read) hazards by B and WAW (write after write) hazards by C, then $3A+2B+C=$

Your Answer: | Correct Answer: 12 | Not Attempted | Time taken: 00min 00sec | Discuss

Q #42 Multiple Choice Type | Award: 2 | Penalty: 0.67 | Digital Logic

$X = X_1X_0$ and $Y = Y_1Y_0$ are 2-bit binary numbers. The Boolean function S that satisfies the condition "$X > Y$ if and only if $S = 1$", in its minimized form, is

A. $X_1Y_1 + X_0Y_0$
B. $X_1\overline{Y}_1 + X_0\overline{Y}_0\overline{Y}_1 + X_0\overline{Y}_0X_1$
C. $X_1\overline{Y}_1X_0\overline{Y}_0$
D. $X_1Y_1 + X_0\overline{Y}_0Y_1 + X_0\overline{Y}_0\overline{X}_1$

Your Answer: | Correct Answer: B | Not Attempted | Time taken: 00min 00sec | Discuss

Q #43 Multiple Choice Type | Award: 2 | Penalty: 0.67 | Digital Logic

Find the Boolean functions that need to be applied to the inputs of the circuit on the right in order to obtain the same function in terms of x, y, and z at the output of the circuit shown on the left.

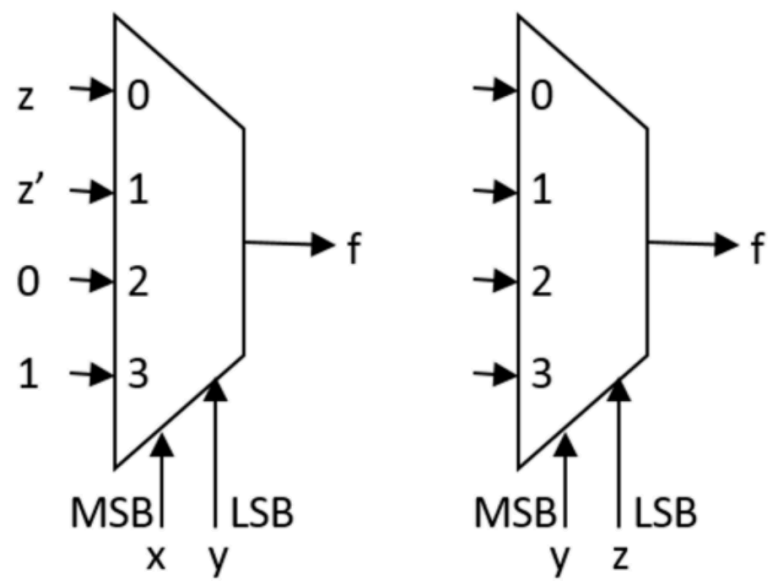

Which of the following is the correct sequence of boolean functions applied at the inputs of the circuit on the right, in the input line order 0 to 3?

A. $0, x, 1, \overline{x}$
B. $1, \overline{x}, 0, x$
C. $0, \overline{x}, 1, x$
D. $0, \overline{x}, \overline{x}, x$

Your Answer: | Correct Answer: C | Not Attempted | Time taken: 00min 00sec | Discuss

Q #44 Multiple Choice Type | Award: 2 | Penalty: 0.67 | Graph Theory

For which of the following does there exist a simple undirected graph $G = (V, E)$ satisfying the specified conditions?

I. G has 3 components, 20 vertices and 16 edges.
II. G has 12 vertices, 28 edges and the degree of each vertex is either 3 or 6.

A. Only I
B. Only II
C. Both
D. None

Your Answer: | Correct Answer: D | Not Attempted | Time taken: 00min 00sec | Discuss

Q #45 | Multiple Choice Type | Award: 2 | Penalty: 0.67 | Theory of Computation

Let M be a single-tape, deterministic Turing machine with tape alphabet $\{\mathrm{blank}, 0, 1\}$, and let C denote the (possibly infinite) computation of M starting with a blank tape. The input to each problem below is M, together with a positive integer n. Which of the following problems is (are) decidable?

I. The computation C lasts for at least n steps.
II. The computation C lasts for at least n steps, and M prints a 1 at some point after the nth step.
III. The computation C lasts for at least n steps, and M prints a 1 at some point before the nth step.

A. None
B. I only
C. I & III only
D. All

Your Answer: | Correct Answer: C | Not Attempted | Time taken: 00min 00sec | Discuss

Q #46 | Multiple Select Type | Award: 2 | Penalty: 0 | Theory of Computation

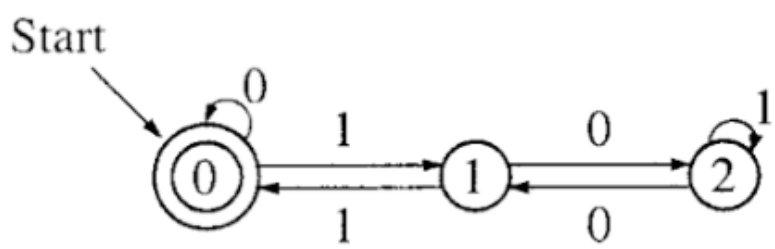

State 0 is both the starting state and the accepting state.

Which of the following regular expressions do not denote a subset of the language recognized by the automaton above?

A. $0^*(11)^*0^*$
B. $0^*1(10^*1)^*1$
C. $0^*1(10^*1)^*10^*$
D. $0^*1\,(10^*1)\,0(100)^*$

Your Answer: | Correct Answer: D | Not Attempted | Time taken: 00min 00sec | Discuss

Q #47 | Multiple Choice Type | Award: 2 | Penalty: 0.67 | Theory of Computation

A path in a directed graph is a series of one or more nodes $v_1, v_2, \ldots, v_n$ such that each pair of adjacent nodes v_i, v_j in the path is connected by an edge $v_i \rightarrow v_j$.

Consider the following graph G :

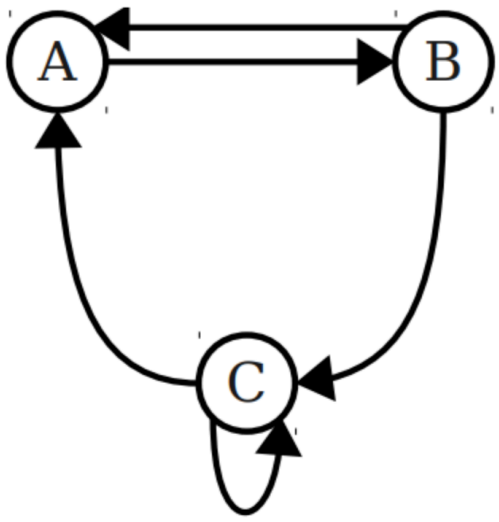

Let $\Sigma = \{\mathrm{A}, \mathrm{B}, \mathrm{C}\}$. We can represent a path in G as a nonempty string where the letters spell out the path in the graph. For example, the path $\mathrm{A}, \mathrm{B}, \mathrm{C}, \mathrm{C}$ would be represented by the string ABCC.

Let $\mathrm{L} = \{w \in \Sigma^* \mid w$ represents a path in $\mathrm{G}\}$, where G is the graph given above. For example:

$$\begin{array}{ll} \mathrm{A} \in \mathrm{L} & \mathrm{ACC} \notin \mathrm{L} \\ \mathrm{ABC} \in \mathrm{L} & \varepsilon \notin \mathrm{L} \\ \mathrm{BCC} \in \mathrm{L} & \mathrm{BBA} \notin \mathrm{L} \\ \mathrm{CCABA} \in \mathrm{L} & \mathrm{ABBC} \notin \mathrm{L} \end{array}$$

Which of the following is true for language L?

A. L is a regular language.
B. L is a deterministic context-free language(DCFL) but not regular.
C. L is context-free language(CFL) but not DCFL.
D. L is not CFL.

Your Answer: | Correct Answer: A | Not Attempted | Time taken: 00min 00sec | Discuss

Q #48 | Numerical Type | Award: 2 | Penalty: 0 | Theory of Computation

Suppose that you really, really don't like the string abba and want to build a language of everything except that string. Let $\Sigma = \{\mathrm{a}, \mathrm{b}\}$ and consider the language $\mathrm{NOT}_{\mathrm{abba}}$ defined as follows:

$$\mathrm{NOT}_{\mathrm{abba}} = \{w \in \Sigma^* \mid w \neq \mathrm{abba}\}$$

For example, $\varepsilon \in \mathrm{NOT}_{\mathrm{abba}}$ and $abbabb \in \mathrm{NOT}_{\mathrm{abba}}$, but (unsurprisingly) $\mathrm{abba} \notin \mathrm{NOT}_{\mathrm{abba}}$. What is the number of states in the minimal DFA(deterministic finite automaton) for L?

Your Answer: | Correct Answer: 6 | Not Attempted | Time taken: 00min 00sec | Discuss

Q #49 | Numerical Type | Award: 2 | Penalty: 0 | Digital Logic

Two T-flip flops are interconnected as shown in the figure. The present state of the flip flops are: $\mathrm{A} = 1,\ \mathrm{B} = 1$. The input x is given as $1, 0, 1$ in the next three clock cycles. The decimal equivalent of $(\mathrm{ABy})_2$ with A being the MSB and y being the LSB, after the 3rd clock cycle is _____.

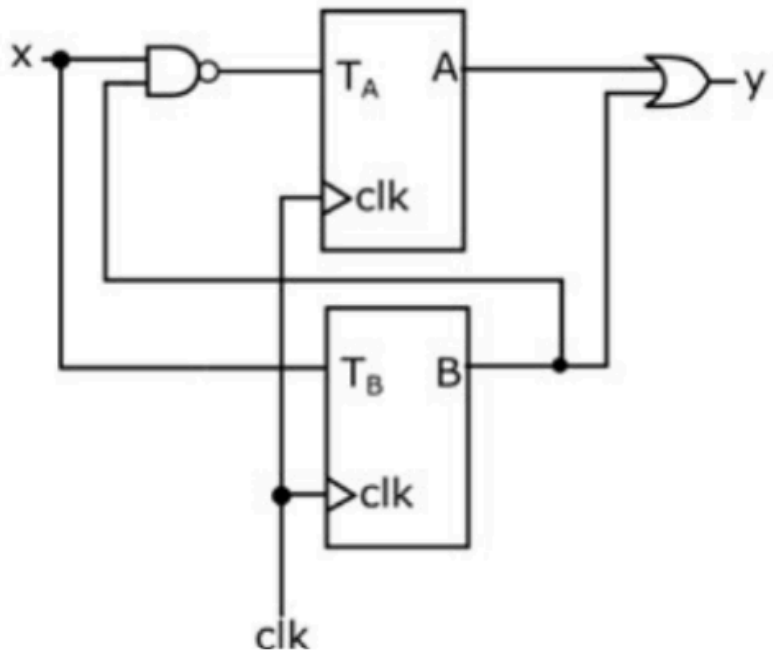

Your Answer: | Correct Answer: 7 | Not Attempted | Time taken: 00min 00sec | Discuss

Q #50 Multiple Choice Type | Award: 2 | Penalty: 0.67 | Programming in C

Given the following code fragment, what value is printed by main()?

```
int fiddle (int a) {
    if (a == 1 || a == 2)
        return a;
    if (a > 0)
        return fiddle(a-2);
    if (a <= 0)
        return fiddle(a+2);
}

foodle (int val) {
    if (val < 0)
    return fiddle(val + 5);
    else
    return fiddle(val - 5);
}

 int main(void)
 {
    printf("%d", foodle(-9));
    return 0;
}
```

A. 2
B. -9
C. 1
D. the program will loop forever and never display anything 9.

Your Answer: | Correct Answer: A | Not Attempted | Time taken: 00min 00sec | Discuss

Q #51 Multiple Select Type | Award: 2 | Penalty: 0 | Theory of Computation

Let Σ be the input alphabet, $a \in \Sigma$, and $w, x \in \Sigma^*$. ϵ is the empty string. Recall that the ' $w \bullet x$ ' or ' wx ' denotes the concatenation of two strings w, x, and $|w|$ is the length of string w.

Consider the following pair of mutually recursive functions:

$$\text{evens}(w) := \begin{cases} \varepsilon & \text{if } w = \varepsilon \\ \text{odds}(x) & \text{if } w = ax \end{cases} \qquad \text{odds}(w) := \begin{cases} \varepsilon & \text{if } w = \varepsilon \\ a \cdot \text{evens}(x) & \text{if } w = ax \end{cases}$$

Which of the following identities hold for all strings w and x?

A. $\text{evens}(w \bullet x) = \text{evens}(w) \bullet \text{evens}(x)$ if $|w|$ is even.
B. evens $(w \bullet x) = \text{odds}(w) \bullet \text{odds}(x)$ if $|w|$ is odd.
C. odds $(w \bullet x) = \text{odds}(w) \bullet \text{evens}(x)$ if $|w|$ is even.
D. $\text{odds}(w \bullet x) = \text{odds}(w) \bullet \text{evens}(x)$ if $|w|$ is odd.

Your Answer: | Correct Answer: A;D | Not Attempted | Time taken: 00min 00sec | Discuss

Q #52 | Multiple Select Type | Award: 2 | Penalty: 0 | Databases

In a relational database relation, we say a non-empty set of attributes X is closed (with respect to a given set of functional dependencies FD) if $\mathrm{X}^{+} = \mathrm{X}$ (where $\mathrm{X}^{+}$is the closure of X). Consider a relation with schema $\mathrm{R}\{\mathrm{A}, \mathrm{B}, \mathrm{C}, \mathrm{D})$ and an unknown set of FD's. If we are told which sets of attributes are closed, we can discover the FD's.

Assume that the only closed sets are $\{\mathrm{A}, \mathrm{B}\}, \{\mathrm{C}\}, \{\mathrm{A}, \mathrm{B}, \mathrm{C}, \mathrm{D}\}$.

Which of the following is/are true for R?

A. The number of candidate keys is 2.
B. The number of non-prime attributes is 2.
C. R is in $2\mathrm{NF}$.
D. The number of non-trivial FDs of the form $\mathrm{X} \rightarrow \mathrm{Y}$ where X, Y both are single attributes, is 5.

Your Answer: | Correct Answer: C;D | Not Attempted | Time taken: 00min 00sec | Discuss

Q #53 | Multiple Select Type | Award: 2 | Penalty: 0 | Databases

Consider the following database table $\mathrm{R}(\mathrm{X}, \mathrm{Y})$:

x	y
1	2
1	2
2	3
3	4
3	4
4	1
4	1
4	1
4	2

Compute the result of the following SQL query:

```
SELECT a1.x, a2.y, COUNT(*)
FROM R a1, R a2
WHERE a1.y = a2.x
GROUP BY a1.x, a2.y
```

Which of the following is(are) in the result?

A. $(1, 3, 2)$
B. $(4, 2, 6)$

C. $(4, 3, 1)$
D. $(4, 4, 0)$

Your Answer: | Correct Answer: A;B;C | Not Attempted | Time taken: 00min 00sec | Discuss

Q #54 | Multiple Choice Type | Award: 2 | Penalty: 0.67 | Computer Networks

Suppose that it takes 1 unit of time to transmit a frame (of fixed size) on a communication link. The link layer uses Go-Back- N protocol with a window size of $\mathrm{N} = 10$ frames. Each frame causes an ack or a nak to be generated by the receiver, and ack/nak transmission times are negligible. Further, the round trip time (representing here the time when the first bit of the segment is transmitted till its acknowledgment is received) on the link is equal to N units.

Assume that errors occur deterministically, once every ten frame transmissions from sender to receiver and that there are never any errors on the acknowledgments.

Which of the following is CORRECT?

A. The sender will be able to send the 10th frame on the first attempt.
B. The sender will be able to send the 10th frame in the first retransmission (second attempt).
C. The sender will be able to send the 10th frame in the second retransmission (third attempt).
D. The sender will never be able to send the 10th frame successfully.

Your Answer: | Correct Answer: D | Not Attempted | Time taken: 00min 00sec | Discuss

Q #55 | Multiple Choice Type | Award: 2 | Penalty: 0.67 | CO & Architecture

Consider the following code that accesses a two-dimensional array (of size 64×64 ints). Assume we are using a direct-mapped, $1\ \mathrm{KB}$ cache with $16\ \mathrm{B}$ block size.
Consider Sizeof(int) = 4.

```
for (int i = 0; i < 64; i++)
    for (int j = 0; j < 64; j++)
        array[i][j] = 0; // assume &array = 0x000000
```

What is the miss rate of the execution of the entire loop?

A. 25%
B. 50%
C. 100%
D. 75%

Your Answer: | Correct Answer: A | Not Attempted | Time taken: 00min 00sec | Discuss

Copyright & Stuff